GREEN PRODUCT

REV.	ECN. NO.	LOCATIONS	DESCRIPTION	DATE	DESIGN
A0			INITIAL RELEASE	03/05'24	龚帆

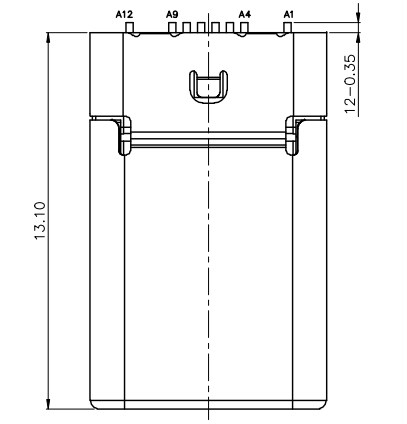

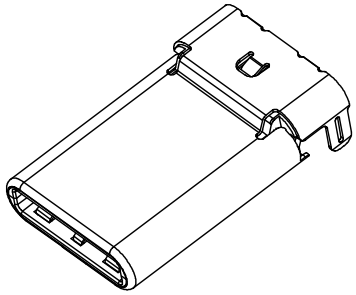

A1	GND	B12	GND
A4	VBUS	B9	VBUS
A5	CC	B8	SBU2
A6	D+	B7	
A7	D-	B6	
A8	SBU1	B5	VCONN
A9	VBUS	B4	VBUS
A12	GND	B1	GND
PIN	SIGNAL NAME	PIN	SIGNAL NAME

NOTE:

1. MECHANICAL:
   - 1-1.MATING FORCE: 0.5~2.0Kgf
   - 1-2.UMMATING FORCE: Initial: 0.8~2.0Kgf
     After 10,000 cycles: 0.6~2.0Kgf
   - 1-3.FREQUENCE:500±50 CYCLES/HOUR,10000 CYCLES;
2. ELECTRICAL CHARACTERISTICS:
   - 2-1. CURRENT RATING: 5.00 A for VBUS, 1.25 A for VCONN
     0.25 A FOR OTHER PINS
   - 2-2. INITIAL CONTACT RESISTANCE:40mΩ Max.
   - 2-3. INSULATION RESISTANCE:100MΩ MIN
   - 2-4. WITHSTANDING VOLTAGE:100V AC,1 MINUTE;
3. ENVIRONMENTAL
   TEMPERATRUE RANGE: -25°C TO +85°C.
4. PART NO. DESCRIPTION:

TC N 4 16 X - 4 1 -5 0 -067

- SHELL PLATED: N: Ni
- PLATED ON CONTACT AREA:
  - B: Contact area: Au 1u" Min.
  - E: Contact area: Au 3u" Min.
  - D: Contact area: Au 15u" Min.
  - C: Contact area: Au 30u" Min.
- HOUSING MATERIAL: 4:LCP
- HOUSING COLOUR: 1:BLACK
- 5:REEL
- 0:NO MARK

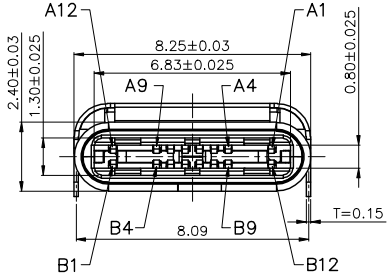

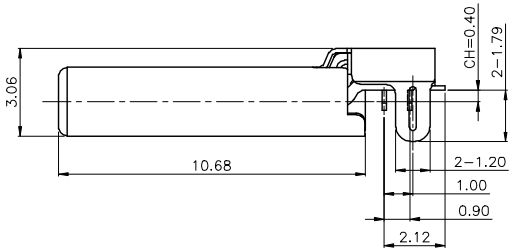

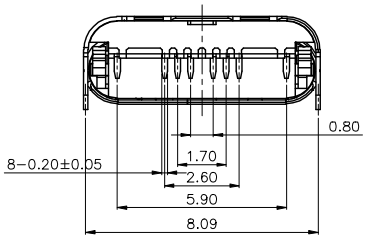

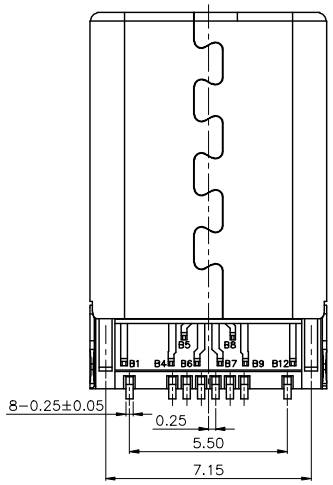

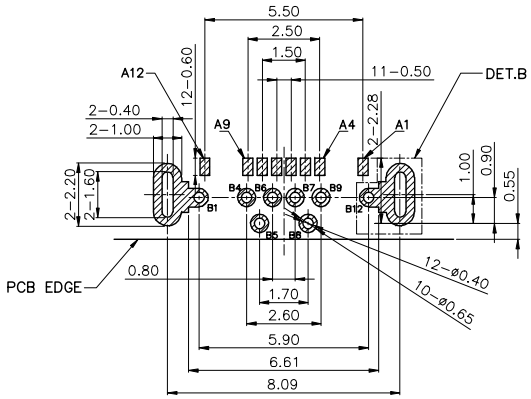

RCOMMENDED P.C.B
TOLERANCE=±0.05(TOP VIEW)

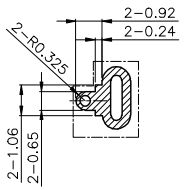

DETAIL B

ITEM	PART NAME	Q'TY	MATERIAL	FINISH
1	INSULATOR	1	THERMOPLASTIC	Black, UL94V-0
2	CONTACT	16	HIGH CONDUCTIVITY COPPER	Contact area:Gold plated over Ni. DIP Solder area:Matte Tin plated over Ni. SMT Solder area:Matte Tin plated over Ni.
3	SHELL	1	STAINLESS STEEL	Ni plated over all
4	EMI SPRING	2	STAINLESS STEEL	CLEAN
5	MID-PLATE	1	STAINLESS STEEL	Ni plated over all

INTENDED USE	UNIT	東莞康祥電子有限公司 DONG GUAN KANG XIANG ELECTRON CO.,LTD.	
PART NO. TCN416X-41-50-067	FINISH: SEE NOTE	APPD:	TITLE: TYPE-C PLUG STANDARD DIP+SMT 16P CH=0.4 L=13.10
TOLERANCES .X ±0.35 X.°± 2° .XX± 0.25 X.X°± 1.5°	MAT'L: SEE NOTE	CHKD:	FILE NO. 93-006A / REV. A0
		DR: 龚帆 03/05'24	SCALE 1/1 / SHEET 1 OF 1

Customer