GREEN PRODUCT

REV.	ECN. NO.	LOCATIONS	DESCRIPTION	DATE	DESIGN
A0			INITIAL RELEASE	2023/12/21	龚帆

USB TYPE-C FULL-FEATURED RECEPTACLE INTERFACE PIN ASSIGNMENTS

PIN	Signal Name	Description	PIN	Signal Name	Description
A1	GND	Ground return	B12	GND	Ground return
A2	SSTXp1	Positive half of firs SuperSpeed TX differential pair	B11	SSRXp1	Positive half of firs SuperSpeed RX differential pair
A3	SSTXn1	Negative half of first SuperSpeed TX differential pair	B10	SSRXn1	Negative half of first SuperSpeed RX differential pair
A4	VBUS	Bus Power	B9	VBUS	Bus Power
A5	CC1	Configuration Channel	B8	SBU2	Sideband Use(SBU)
A6	Dp1	Positive half of the USB 2.0 differential pair-Position 1	B7	Dn2	Positive half of the USB 2.0 differential pair-Position 2
A7	Dn1	Negative half of the USB 2.0 differential pair-Position 1	B6	Dp2	Negative half of the USB 2.0 differential pair-Position 2
A8	SBU1	Sideband Use(SBU)	B5	CC2	Configuration Channel
A9	VBUS	Bus Power	B4	VBUS	Bus Power
A10	SSRXn2	Negative half of second SuperSpeed RX differential pair	B3	SSTXn2	Negative half of second SuperSpeed TX differential pair
A11	SSRXp2	Positive half of second SuperSpeed RX differential pair	B2	SSTXp2	Positive half of second SuperSpeed TX differential pair
A12	GND	Ground return	B1	GND	Ground return

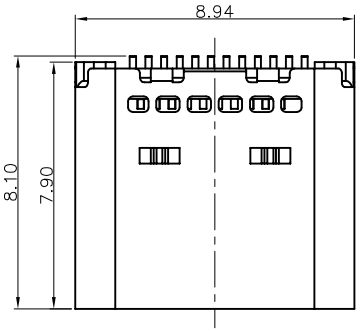

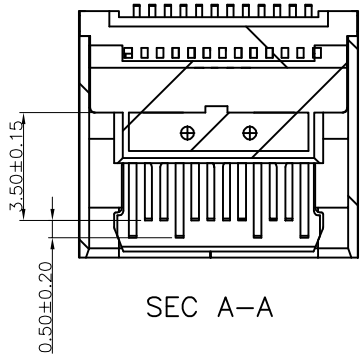

SEC A-A

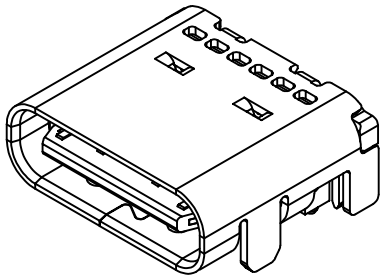

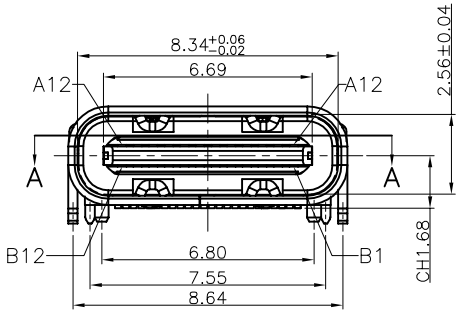

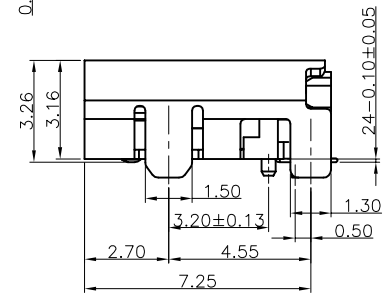

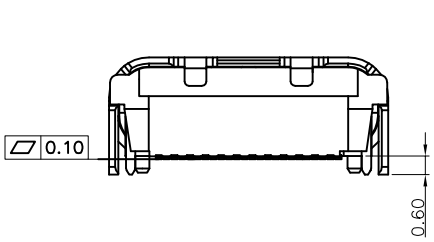

1.ELECTRICAL:
- 1.1CURRENT RATING:3A MAX
- 1.2.VOLTAGE:100vac RATING:1.5 MAX
- 1.3.CONTACT RESISTANCE: 40mΩ MAX.
- 1.4.TEMPERATURE RANGE -30°C ~ +85°C
- 1.5.INSULATION RESISTANCE: 100MΩ MIN.

2.MECHANICAL:
- INSERTION: 5~20N.
- EXTRACTION: 8~20N.
- DURABILITY: 10000 CYCLES

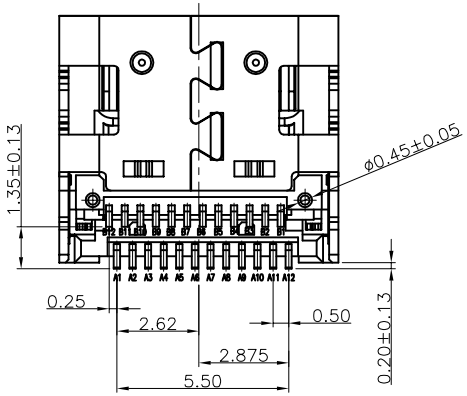

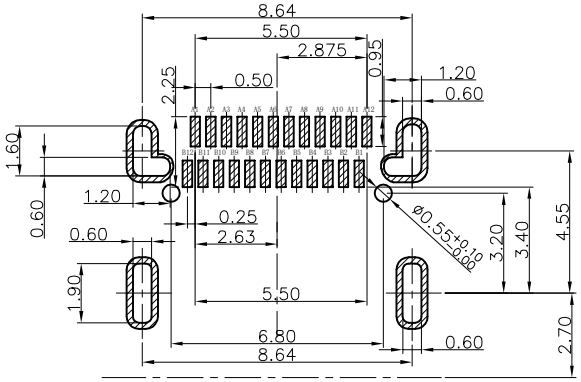

RECOMMENDED P.C.B. LAYOUT
TOLERANCE UNSPECIFIED ±0.05mm

5.MATERIAL LIST:

No.	PART NAME	QTY	MATERIAL	REMARK
4	MID PLATE	1	STAINLESS STEEL	NI PLATED
3	SHELL	1	STAINLESS STEEL	NI PLATED
2	CONTACT	24	COPPER ALLOY	**GOLD PLATED**
1	HOUSING	1	THERMOPLASTIC(LCP)	**(UL 94V-0)**

INTENDED USE	UNIT mm	KANXIAN 東莞康祥電子有限公司 DONG GUAN KANG XIANG ELECTRON CO.,LTD.	
PART NO. TMN424L-41-5N-062	FINISH	APPD:	TITLE: USB C TYPE 母座双排SMT有柱
DECIMALS: x.xx ± 0.25 x.x ± 0.30 ANGLES: X :±2° X.X :±1°	MAT'L	CHKD:	FILE NO. / REV. A0
		DR: 龚帆 2023/12/21	SCALE N/A / SHEET 1 OF 1

Customer